3/4" ϕ THREADED ROD ANCHORS* INSTALLED W/ SIMPSON STRONG-TIE SET-XP™ EPOXY-TIE ADHESIVE TO AN EMBEDMENT DEPTH OF __" IN CONCRETE. INSTALL IN ACCORDANCE WITH MANUFACTURER'S LITERATURE AND ICC-ES ESR-2508.
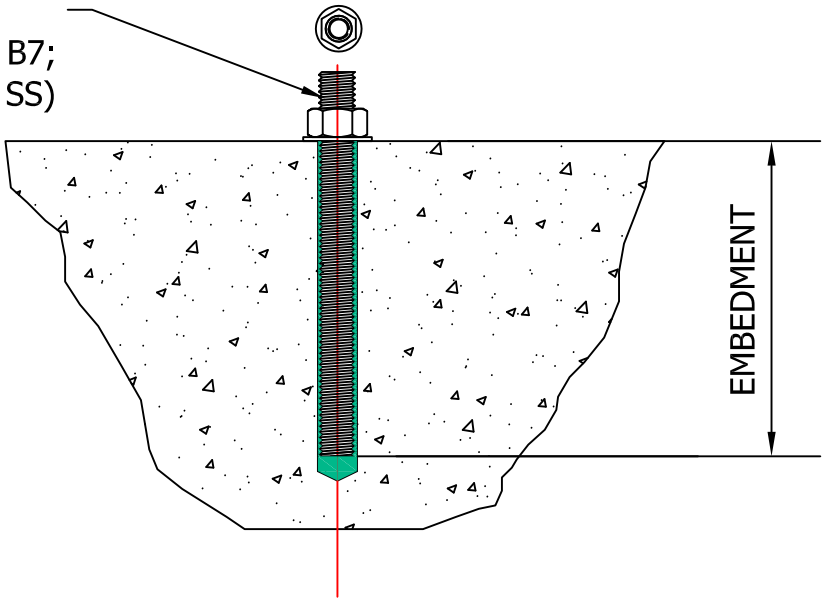
*APPLICABLE STEEL TYPES INCLUDE: ASTM A307, GRADE C; ASTM A193, GRADE B7; ASTM A193, GRADE B6 (TYPE 410 SS); & ASTM A193, GRADE B8 (TYPE 304 SS)